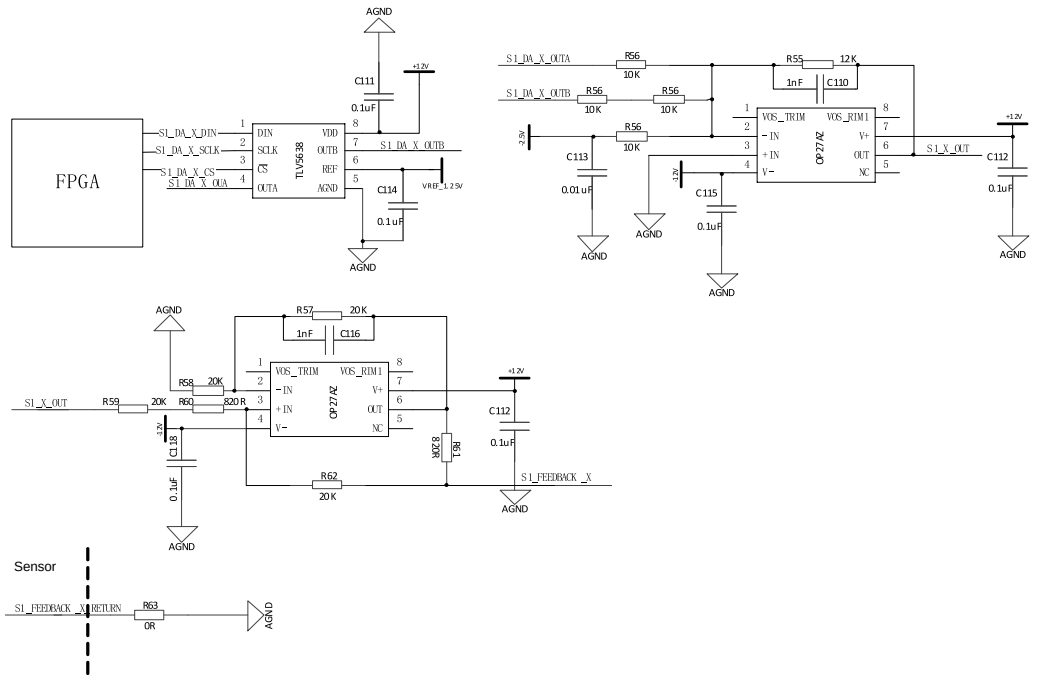
FPGA
S1_DA_X_DIN
S1_DA_X_SCLK
S1_DA_X_CS
S1_DA_X_OUA
TLV5638
DIN
SCLK
CS
OUTA
VDD
OUTB
REF
AGND
S1_DA_X_OUTB
VREF_1.25V
C111
0.1uF
C114
0.1uF
AGND
+12V
S1_DA_X_OUTA
S1_DA_X_OUTB
R56
10K
R55
12K
1nF
C110
OP27AZ
VOS_TRIM
VOS_RIM1
-IN
+IN
V-
V+
OUT
NC
S1_X_OUT
C112
0.1uF
C113
0.01uF
2.5V
1.2V
C115
0.1uF
R57
20K
C116
R58
20K
R59
20K
R60
820R
C118
0.1uF
R61
8.20K
R62
20K
S1_FEEDBACK_X
Sensor
S1_FEEDBACK_X_RETURN
R63
0R